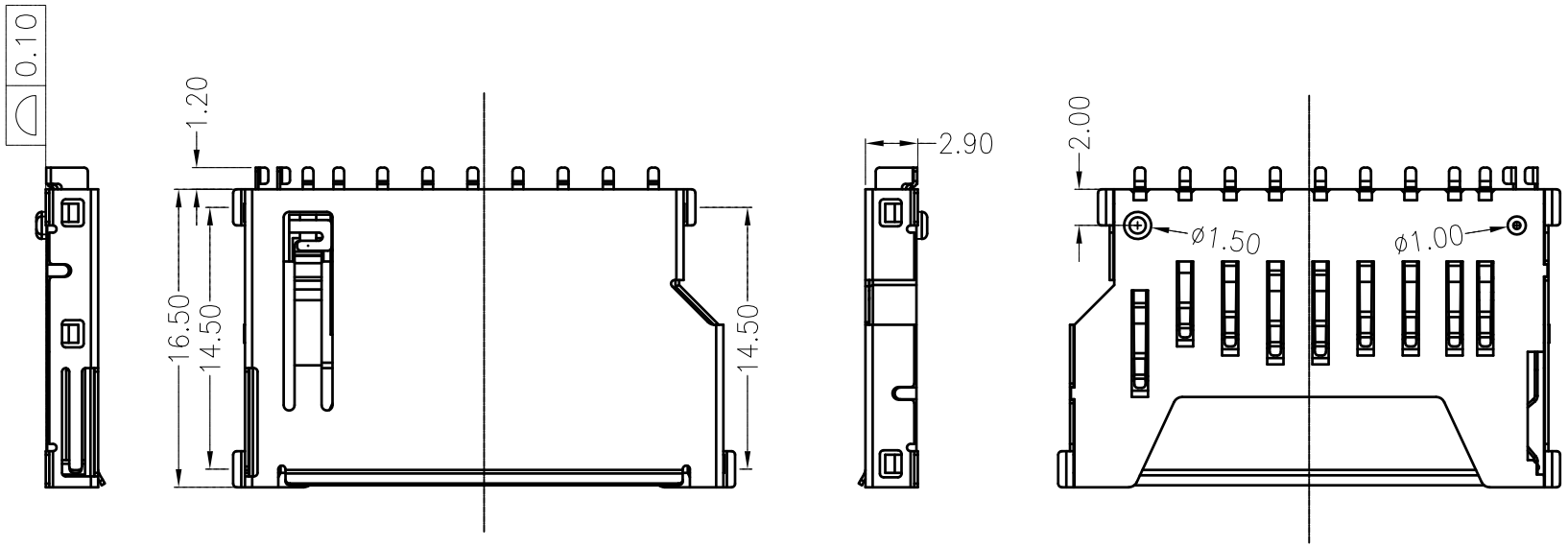

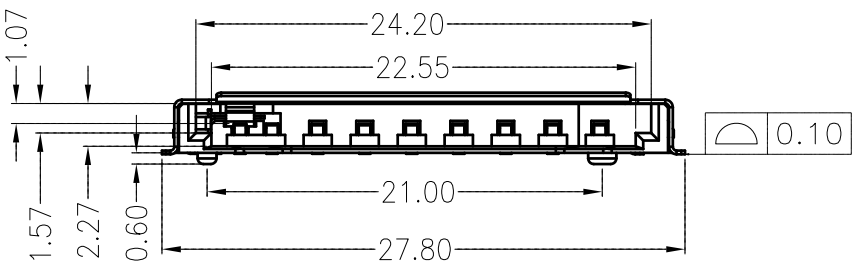

NOTES:

1.MATERIAL:
- HOUSING: HIGH TEMPERATURE THERMOPLASTIC UL94V_0,COLOR:WHITE.
- CONTACT: COPPER ALLOYS.
- COVER: SPTE.

2.PLATING:
- UNDERPLATE: NICKEL.
- CONTACT AREA: GOLD OVER NICKEL.
- SOLDER AREA: TIN OVER NICKEL.

3.MULTIMEDIA CARD COMPATIBLE

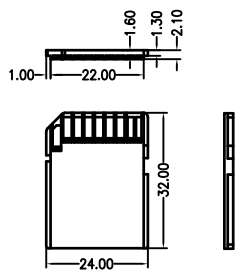

SD CARD

PART NO:		MATERIAL:	深圳市迈瑞康电子有限公司
LOT NO:		FINSH:	
UNIT: MM	SIZE: A4	COLOR:	TITLE: SD短卡 铁壳
TOLERANCES: X.X=±0.15 X.XX=±0.05 X.XXX=±0.03	GENERAL ANGLE: X.X=±1.0° X.XX=±0.5°	DR: 杨 凯 2011/03/31	
		CHK:	DWG NO: MRK-SD22-290-0006 REV: A/0
		APP:	SCALE: 1:1 SHEET: 1 OF 1

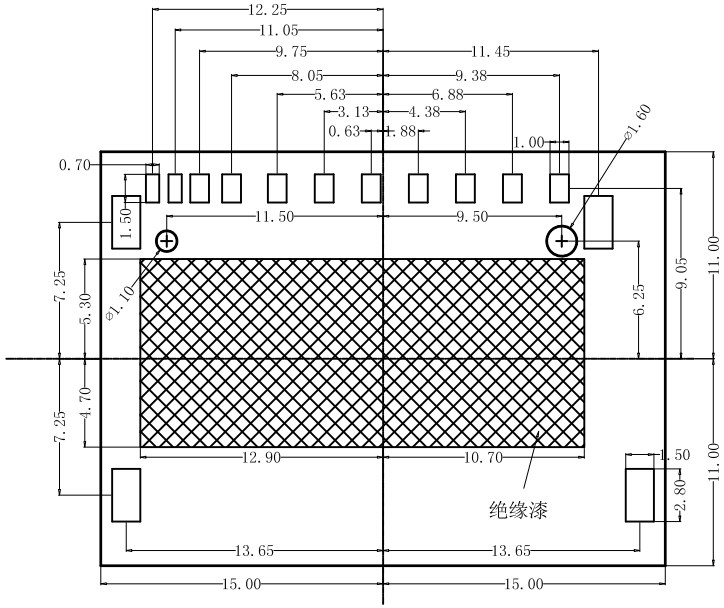

P.C.B LAYOUT
(TOLERANCE:±0.05)

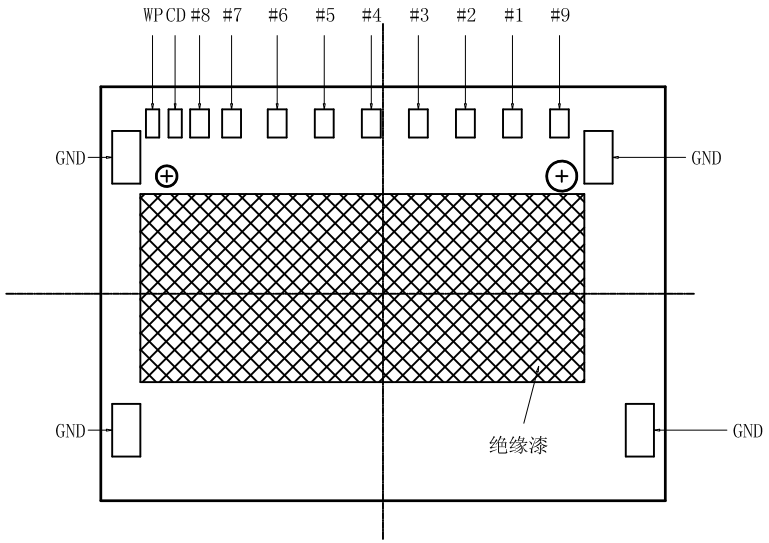

PIN NO.	NAME	DESCRIPTION
1#	CD/DAT3	CARD DETECT
2#	CMD	COMMAND
3#	VSS1	GROUND
4#	VDD	POWEER
5#	CLK	CLACK
6#	VSS2	GROUND
7#	DAT0	DATE I/O
8#	DAT1	DATE I/O
9#	DAT2	DATE I/O

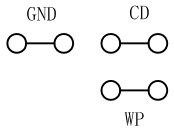

WITHOUT CAED

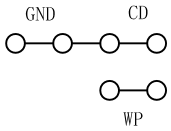

INSERTED CAED

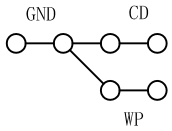

INSERTED CAED
WP UNLOCK

PART NO:		MATERIAL:	深圳市迈瑞康电子有限公司
LOT NO:		FINSH:	
UNIT: MM	SIZE: A4	COLOR:	TITLE: SD短卡 铁壳
TOLERANCES: X.X=±0.15 X.XX=±0.05 X.XXX=±0.03	GENERAL ANGLE: X.X=±1.0° X.XX=±0.5°	DR: 杨 凯 2011/03/31	
		CHK:	DWG NO: MRK-SD22-290-0006 REV: A/0
		APP:	SCALE: 1:1 SHEET: 1 OF 1

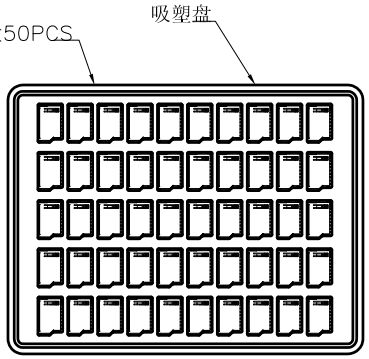

吸塑盘规格:

NO. 1

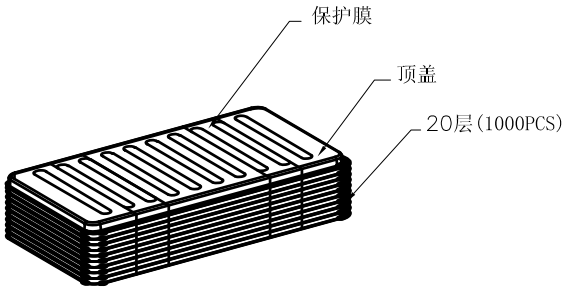

NO. 2

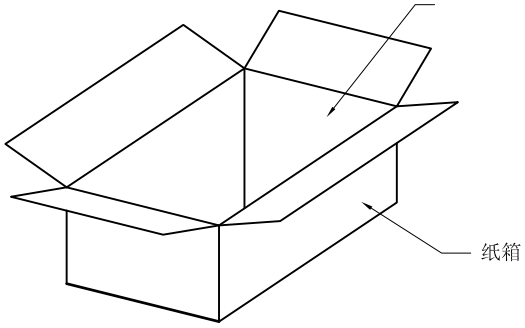

NO. 3

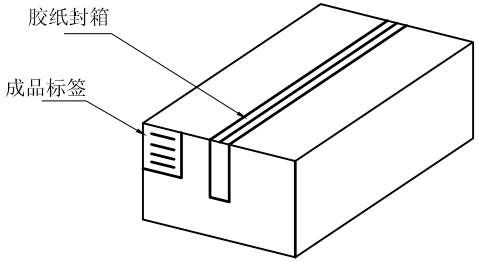

NO. 4

1. 材质要求:
  1.1 纸箱的材质为A=B; 外形尺寸为42*27*37CM;
  1.2 PS盘的材质为PS, PS盘的外形尺寸265*190*10MM;
2. 包装要求:
  2.1 每一盘装50PCS;
  2.2 每20盘累叠在一起, 共计1Kset; 上面需放一个空盘, 后用PE膜缠绕;
  2.3 每 Kset装一个纸箱;
  2.4 把包装好的成品打包封箱, 并在纸箱上贴物料标签;

PART NO:		MATERIAL:	深圳市迈瑞康电子有限公司
LOT NO:		FINSH:	
UNIT: MM	SIZE: A4	COLOR:	TITLE: SD短卡 铁壳
TOLERANCES: X.X=±0.35 X.XX=±0.25 X.XXX=±0.15	GENERAL ANGLE: X.X=±5.0° X.XX=±3.0°	DR: 杨凯 2011/03/31	
1 OF 1		CHK:	DWG NO: MRK-SD22-290-0006 REV: A/0
		APP:	SCALE: 1:1 SHEET: 3 OF 3